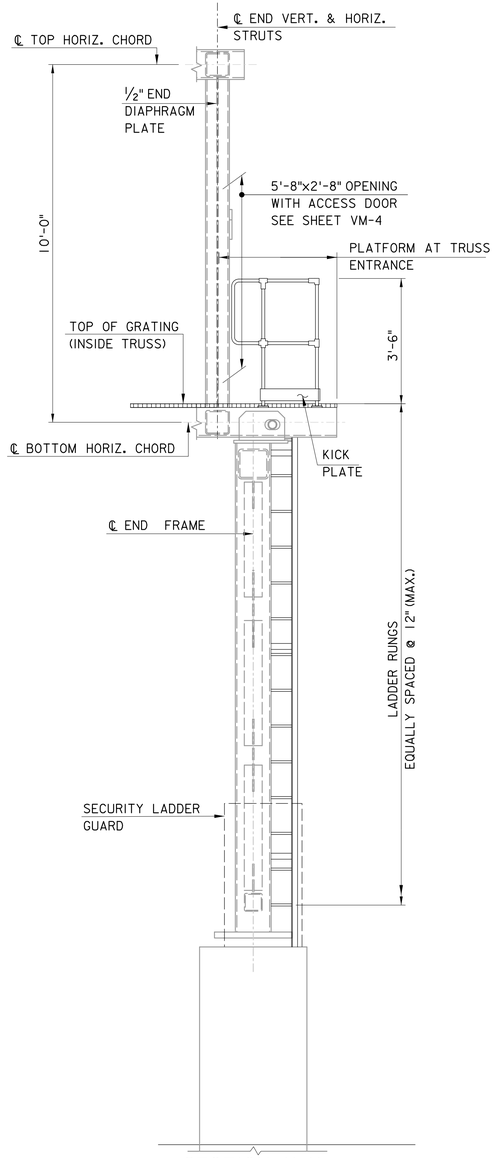

SECTION H-H
N.T.S.

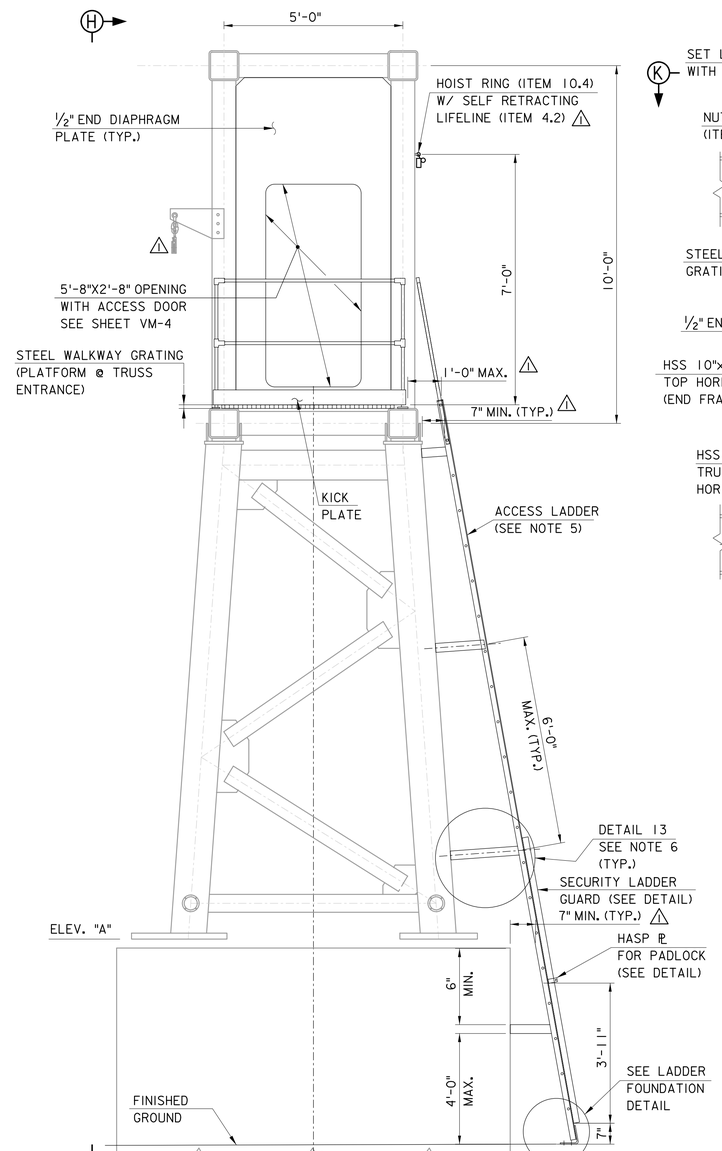

TRUSS END ELEVATION AT LADDER AND PLATFORM
N.T.S.

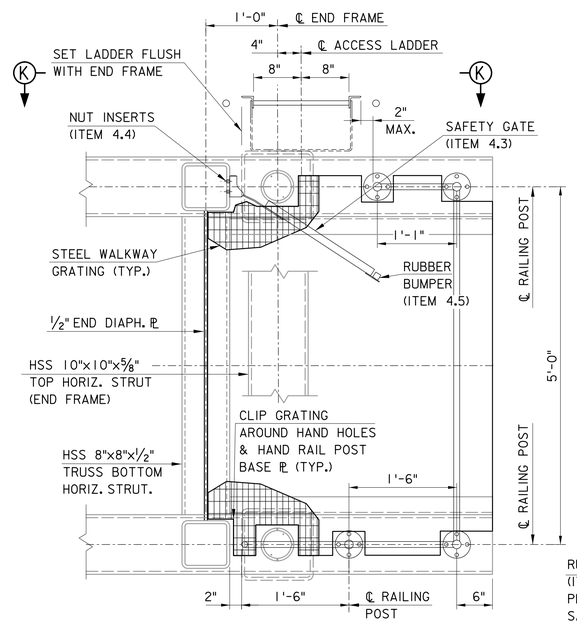

SECTION J-J
1" = 1'-0"

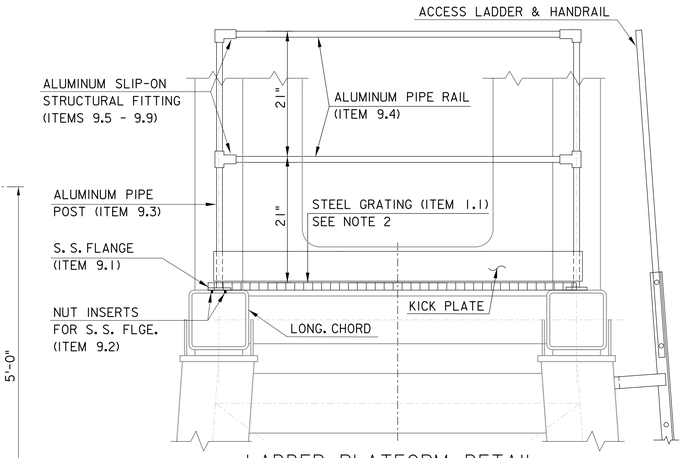

LADDER PLATFORM DETAIL
N.T.S.

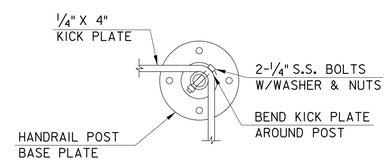

PLAN

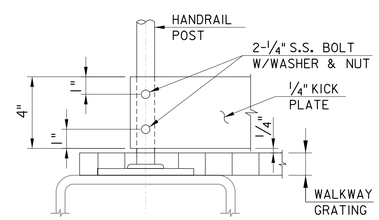

SECTION

KICK PLATE DETAIL
(SHOWN AT CORNER POST, END SIMILAR)
N.T.S.

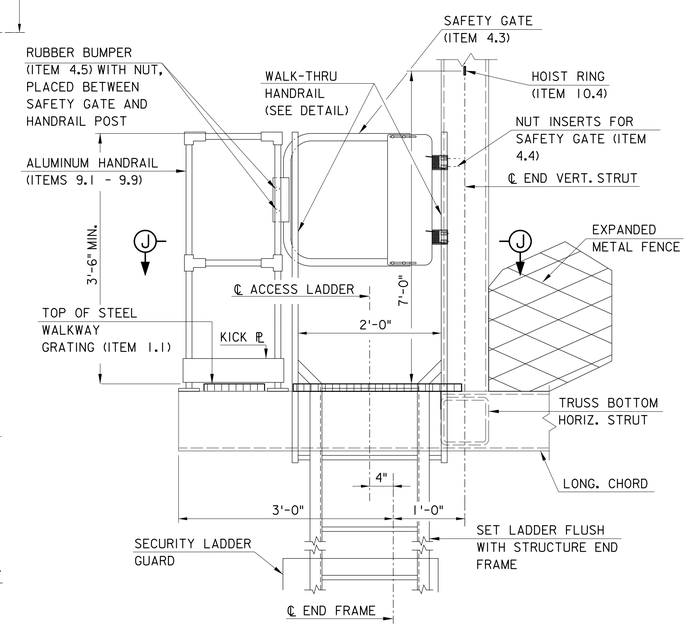

SECTION K-K
1" = 1'-0"

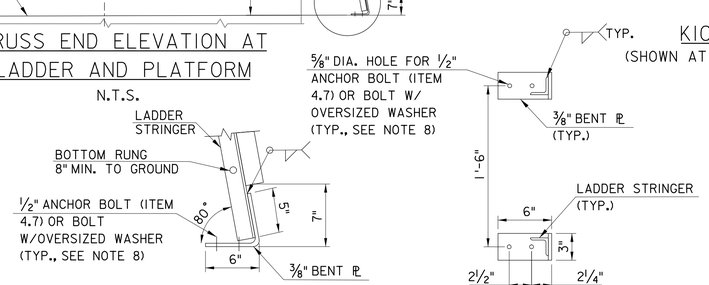

ELEVATION
PLAN
LADDER FOUNDATION DETAIL

NOTES:

1. THE LADDER ASSEMBLY AND HANDRAILS SHALL BE HOT-DIP GALVANIZED IN ACCORDANCEWITH ASTM A123. SPOT REPAIR ALL DAMAGED GALVANIZING LADDER ASSEMBLIES & HANDRAILS AFTER FABRICATION IN ACCORDANCE WITH ASTM A780.
2. STEEL GRATING SHALL BE COPED TO FIT AROUND VERTICAL STRUT MEMBERS AND ALUMINUM HANDRAIL POST, AS REQUIRED.
3. FOR ITEMS LIST, SEE SHEET VM-10.
4. RUBBER BUMPERS SHALL BE PLACED BETWEEN THE SAFETY GATE AND ALUM. HANDRAIL TO AVOID CONTACT BETWEEN THE DISSIMILAR METALS. REAM HOLES AS NECESSARY TO INSERT THE THREADED STUDS OF THE RUBBER BUMPERS INTO THE SAFETY GATE AND SECURE WITH A NUT.
5. THE TOP LADDER RUNG SHALL BE AT THE SAME ELEVATION AS THE WALKWAY GRATING ON THE PLATFORM.
6. FOR DETAIL 13, HASP PLATE DETAIL, HANDRAIL DETAIL, SECURITY LADDER GUARD DETAIL, AND LADDER ATTACHMENT TO PEDESTAL DETAIL, SEE SHEET VM-5.
7. THE HOIST RING SHALL BE DRILLED AND TAPPED INTO THE END VERTICAL STRUT.
8. ANCHOR BOLTS SHALL BE USED FOR CONCRETE MOUNTED LADDERS; BOLT WITH OVERSIZED WASHER SHALL BE USED FOR GRATING MOUNTED LADDERS.

0 ½ 1 2 3 4
ORIGINAL SIZE IN INCHES

APP.	NO.	DATE	REVISION
	1	10/23	REVISED ITEM NUMBER, UPDATED LIFTING ASSEMBLY AND REVISED LADDER CLEARANCE REQUIREMENTS
	C	3/14	CONFORMED DRAWING

NEW JERSEY TURNPIKE AUTHORITY

NEW JERSEY TURNPIKE

OVERHEAD SPAN VMS/VSLS SUPPORT STRUCTURES

ACCESS LADDER AND PLATFORM DETAILS

OFFICE OF THE CHIEF ENGINEER
NEW JERSEY TURNPIKE AUTHORITY
WOODBRIDGE NEW JERSEY

2008 STANDARD
DRAWING VM-6

CONTRACT NO. SHEET NO. OF