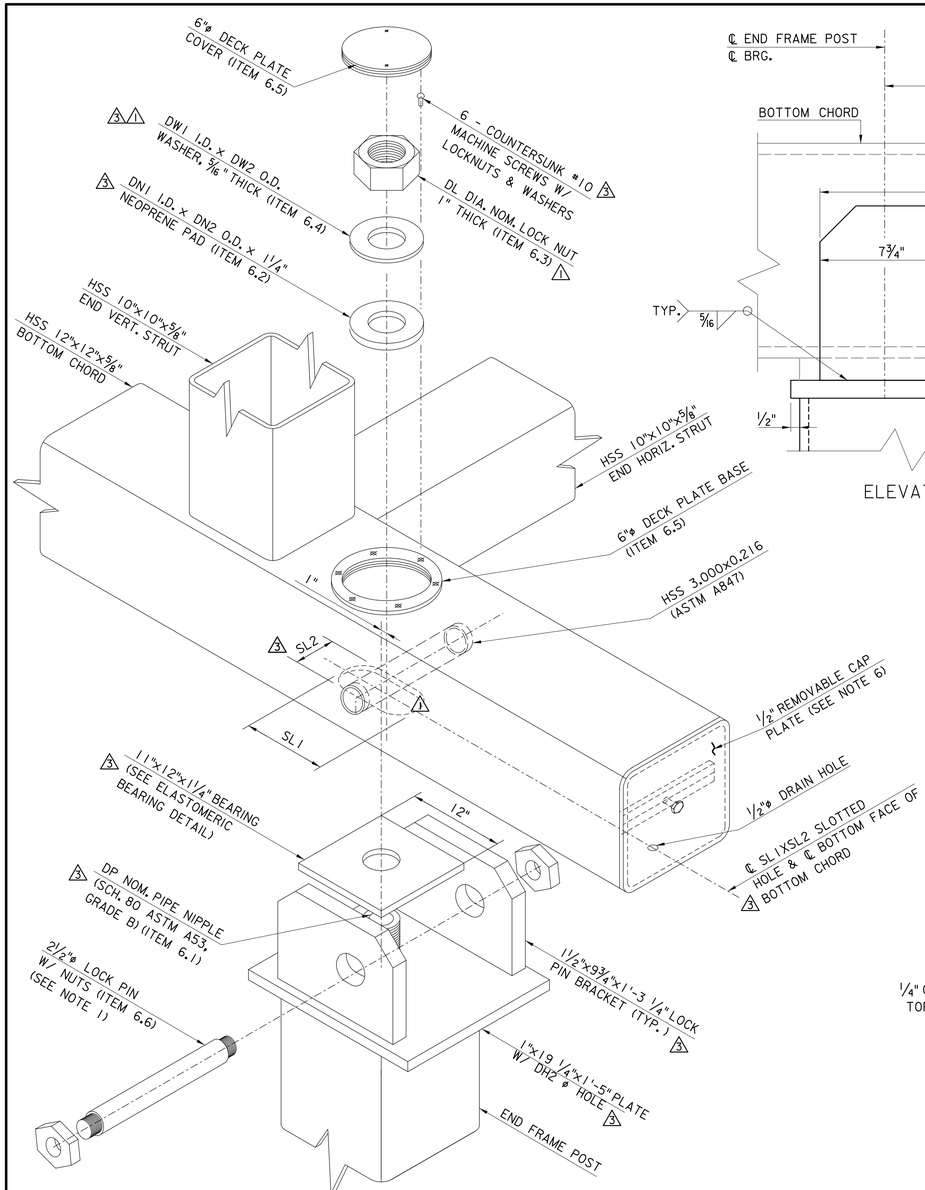

EXPLODED DETAIL OF END FRAME ASSEMBLY

(FOR DIMENSIONS, SEE TABLE A)

N.T.S.

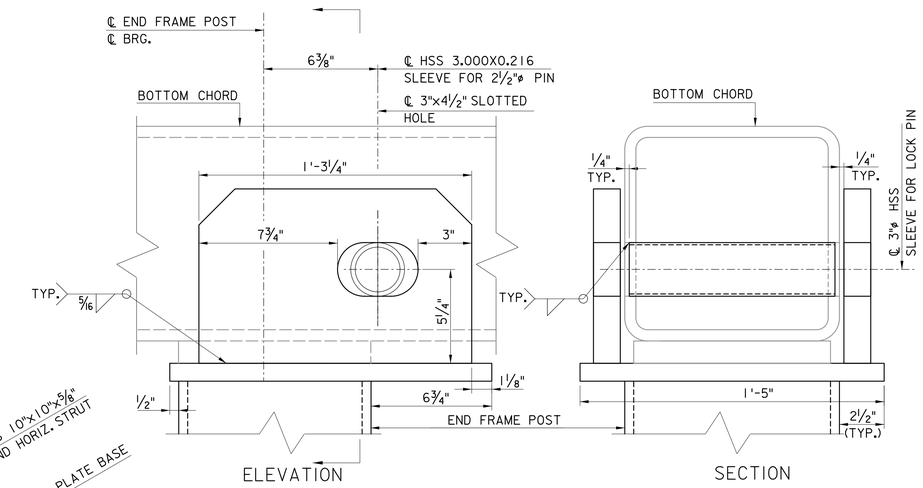

LOCK PIN BRACKET △2△3 DETAIL

3" = 1'-0"

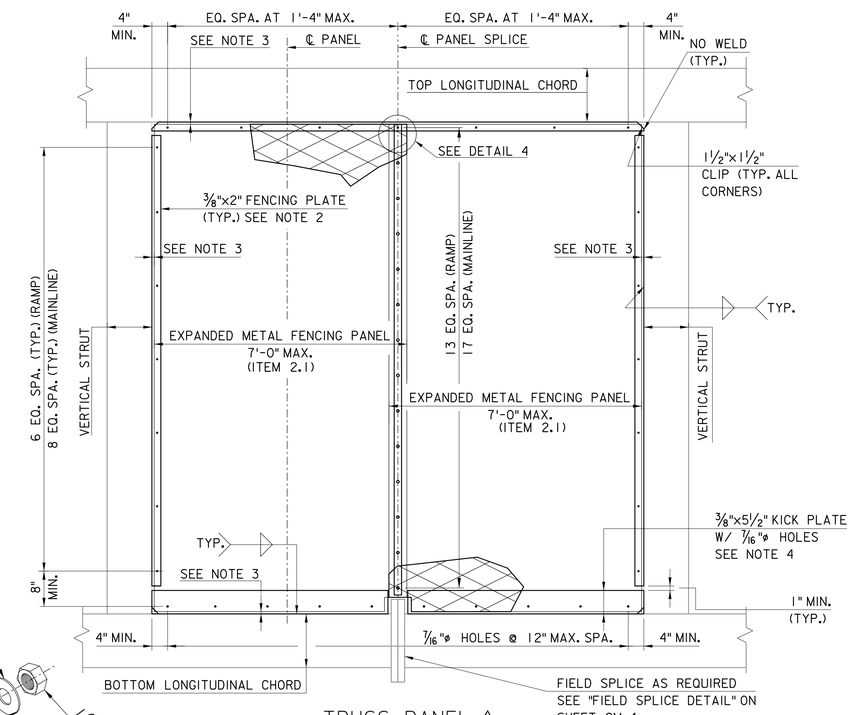

TRUSS PANEL △1

EXPANDED METAL FENCING DETAIL

3/4" = 1'-0"

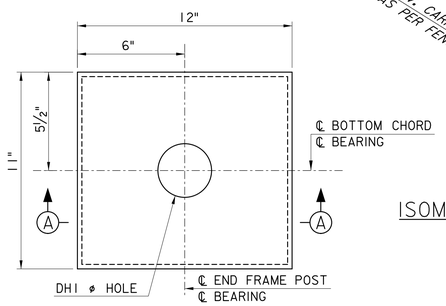

PLAN

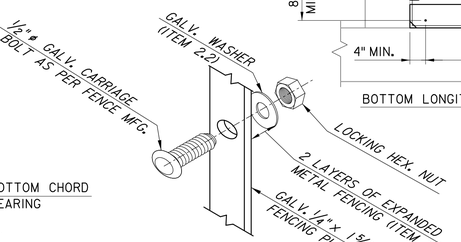

ISOMETRIC OF SPLICE ASSEMBLY △1

N.T.S.

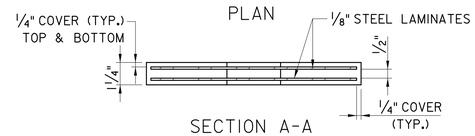

SECTION A-A

△3 ELASTOMERIC BEARING DETAIL

(FOR DIMENSIONS, SEE TABLE A)
(SEE BEARING NOTES)
3" = 1'-0"

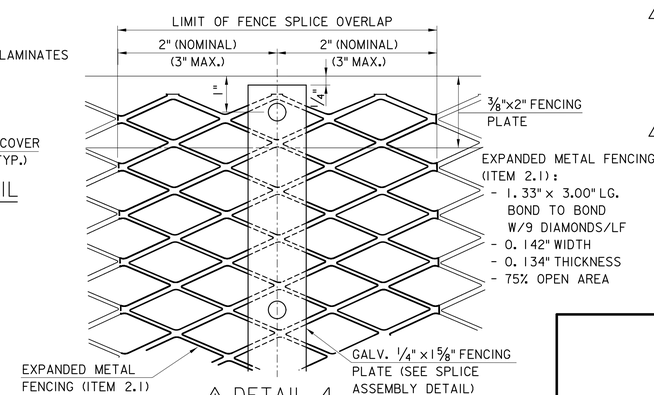

△1 DETAIL 4

EXPANDED METAL FENCE SPLICE DETAIL

N.T.S.

NOTES:

△2 1. THE UNTHREADED GRIP LENGTH OF THE LOCK PIN SHALL BE 15 3/4". PLACE A RECESS NUT AT EACH END OF THE PIN.

△1 2. DRILL 7/16" DIA. HOLES FOR 3/8" DIA. BOLTS IN FENCING PLATES.

△1 3. EXPANDED METAL FENCING SHALL BE A MINIMUM OF 1/2" CLEAR TO ALL CHORD AND STRUT MEMBERS. FOR PLACEMENT ON STRUCTURE, SEE DETAIL 2 ON SHEET CM-4.

4. KICK PLATE SHALL ONLY BE FURNISHED AT BOTTOM LONG. CHORDS.

5. FOR ITEMS LIST, SEE SHEET CM-10.

△3 6. INSERT MAINLINE NEOPRENE PAD AND WASHER OVER PIPE NIPPLE THIS END. INSTALL REMOVABLE CAP PLATE, FOR DETAIL, SEE SHEET CM-7.

BEARING NOTES: △3

1. ELASTOMERIC BEARINGS SHALL CONFORM TO SECTION 408 OF THE NJTA STANDARD SPECIFICATIONS.
2. STEEL LAMINATES SHALL BE ASTM A709, A36 OR A1011 GRADE 36. SMOOTH AND DEBURR CUT STEEL PLATES BY GRINDING. GRIT BLAST AND DEGREASE ALL STEEL PLATES. DO NOT GALVANIZE OR METALIZE STEEL LAMINATES.
3. OVERALL FABRICATION METHODS AND QUALITY INSPECTION PROCEDURE SHALL BE INCLUDED AS WRITTEN PROCEDURE WITH SHOP DRAWING SUBMISSION.
4. ALL BEARING PADS ARE TO BE MOLDED TO DESIGN DIMENSIONS. CUTTING TO SIZE AFTER FABRICATION IS PROHIBITED.
5. SHEAR MODULUS, G = 130 PSI. HARDNESS = 60 OR 70 DUROMETER.
6. COST OF ELASTOMERIC BEARING PADS SHALL BE INCLUDED IN THE ASSOCIATED SIGN STRUCTURE PAY ITEM.

TABLE A - BEARING ACCESSORY DIMENSIONS △3

STRUCTURE TYPE	DP	DN1 x DN2	DW1 x DW2	DL	DH1	DH2	SL1	SL2
MAINLINE SPANS ≤ 105'	2 1/2"	3" x 8"	3 1/8" x 7 1/4"	2 1/2"	3"	2 15/16"	4"	3 1/2"
MAINLINE 105' < SPANS ≤ 120'	3"	3 5/8" x 8 3/4"	3 3/4" x 8"	3"	3 5/8"	3 9/16"	4 5/8"	4"
RAMP SPANS ≤ 120'	2 1/2"	3" x 5 7/8"	3 1/8" x 5"	2 1/2"	3"	2 15/16"	4"	3 1/2"

APP.	NO.	DATE	REVISION
	3	10/23	ADDED BEARING DETAIL, ADDED TABLE A AND BEARING NOTES, REVISED NOTE AND MOVED REMOVABLE CAP DETAIL TO CM-7
	2	4/16	REVISED LOCK PIN BRACKET DETAIL
	1	4/11	REVISED DETAILS AND NOTES
	0	1/10	ORIGINAL DRAWING

0 1/2 1 2 3 4

ORIGINAL SIZE IN INCHES

NEW JERSEY TURNPIKE AUTHORITY

NEW JERSEY TURNPIKE

OVERHEAD SPAN HCMS SUPPORT STRUCTURES

TRUSS AND FENCE DETAILS

OFFICE OF THE CHIEF ENGINEER
NEW JERSEY TURNPIKE AUTHORITY
WOODBRIDGE NEW JERSEY

2010 STANDARD DRAWING CM-5

CONTRACT NO. SHEET NO. OF