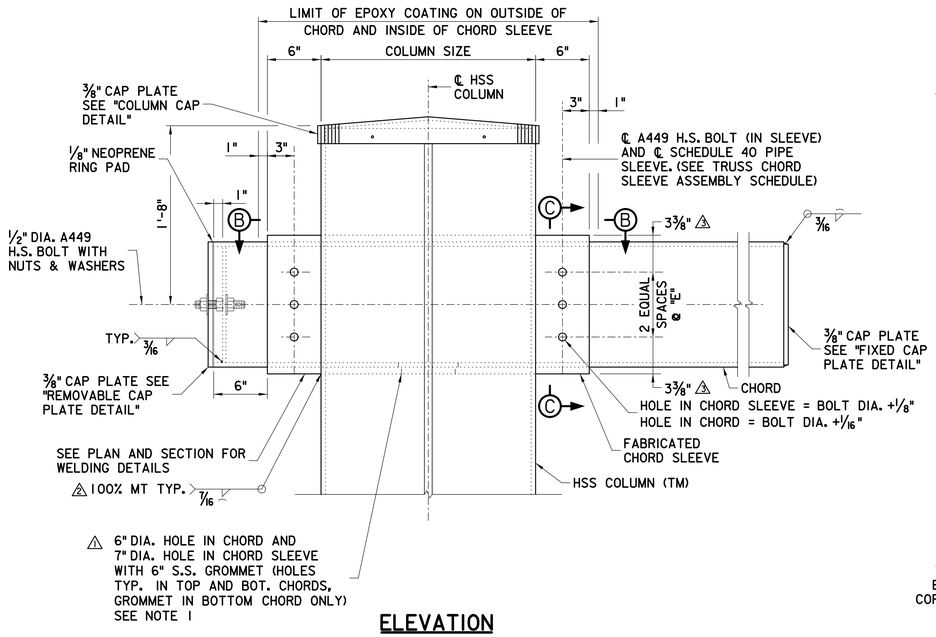

ELEVATION

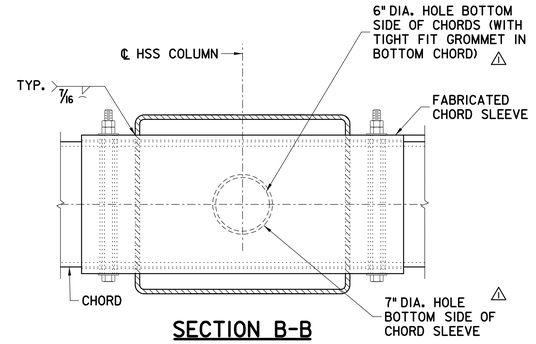

SECTION B-B

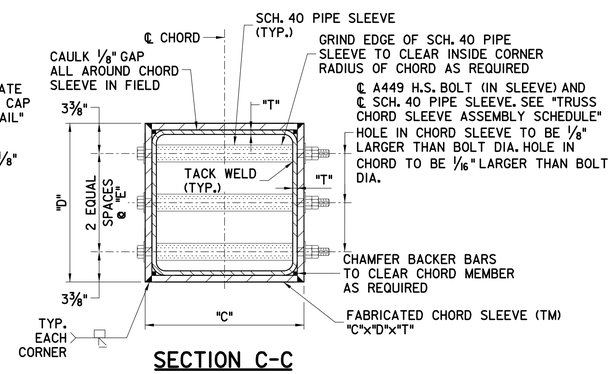

SECTION C-C

COLUMN SLEEVE CONNECTION DETAIL
1 1/2" = 1'-0"

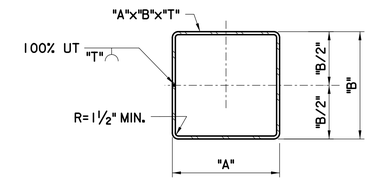

OPTIONAL FABRICATION DETAIL 1
1" = 1'-0"

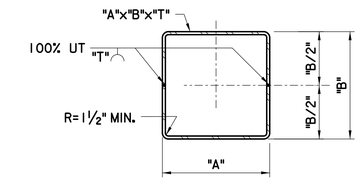

OPTIONAL FABRICATION DETAIL 2
1" = 1'-0"

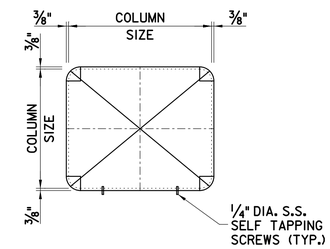

PLAN

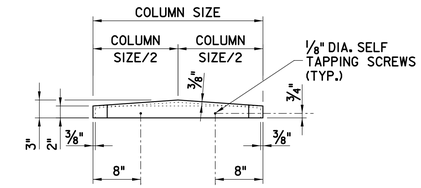

ELEVATION

COLUMN CAP DETAIL
1" = 1'-0"

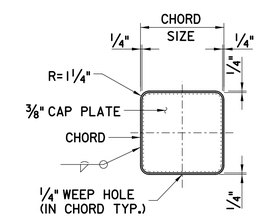

END VIEW
FIXED CAP PLATE DETAIL
1" = 1'-0"

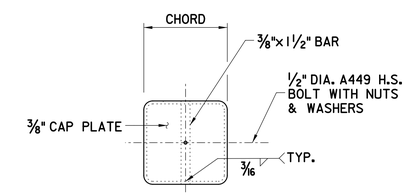

END VIEW
REMOVABLE CAP PLATE DETAIL
1" = 1'-0"

TRUSS CHORD SLEEVE ASSEMBLY SCHEDULE

SPAN LENGTH (FT)	*MAX. PROVISIONAL SIGN PANEL AREA	CHORD SIZE (IN) HSS"A"x"B"x"T"	CHORD SLEEVE SIZE "C"x"D"x"T" (IN)	"E" (IN)	BOLT DIAMETER (IN)	SCH. 40 PIPE SLEEVE DIA. (IN)
20 ≤ TO ≤ 32	300	14x14x1/2	15 3/4x15 3/4x3/4	4 1/2	1 1/8	1 1/4
20 ≤ TO ≤ 32	540	14x14x1/2	15 3/4x15 3/4x3/4	4 1/2	1 1/8	1 1/4
< 32 TO ≤ 38	445	14x14x5/8	15 3/4x15 3/4x3/4	4 1/2	1 1/4	1 1/4
< 32 TO ≤ 38	648	14x14x5/8	16x16x7/8	4 5/8	1 3/8	1 1/2
< 38 TO 42 MAX.	445	16x16x5/8	17 3/4x17 3/4x3/4	5 1/2	1 3/8	1 1/2

• FOR PROVISIONAL SIGN AREA LIMITATIONS SEE STANDARD DRAWING SI-35.

NOTES:

1. S.S. GROMMET SHALL BE McMASTER-CARR ITEM NO. 4911K12, OR APPROVED EQUAL.

0 1/2 1 2 3 4

ORIGINAL SIZE IN INCHES

APP.	NO.	DATE	REVISION
	3	12/22	REVISED FABRICATED CHORD SLEEVE DIMENSIONS
	2	08/15	REVISED WELD TESTING
	1	09/12	ADDED ELECTRICAL PROVISIONS
	0	10/10	ORIGINAL DRAWING

NEW JERSEY TURNPIKE AUTHORITY

GARDEN STATE PARKWAY

VIERENDEEL CANTILEVER TYPE SIGN STRUCTURE (SPANS FROM 20 TO 42 FEET) DETAILS - 2

OFFICE OF THE CHIEF ENGINEER
NEW JERSEY TURNPIKE AUTHORITY

WOODBRIDGE NEW JERSEY

2010 STANDARD

DRAWING SI-37

CONTRACT NO.

SHEET NO. OF