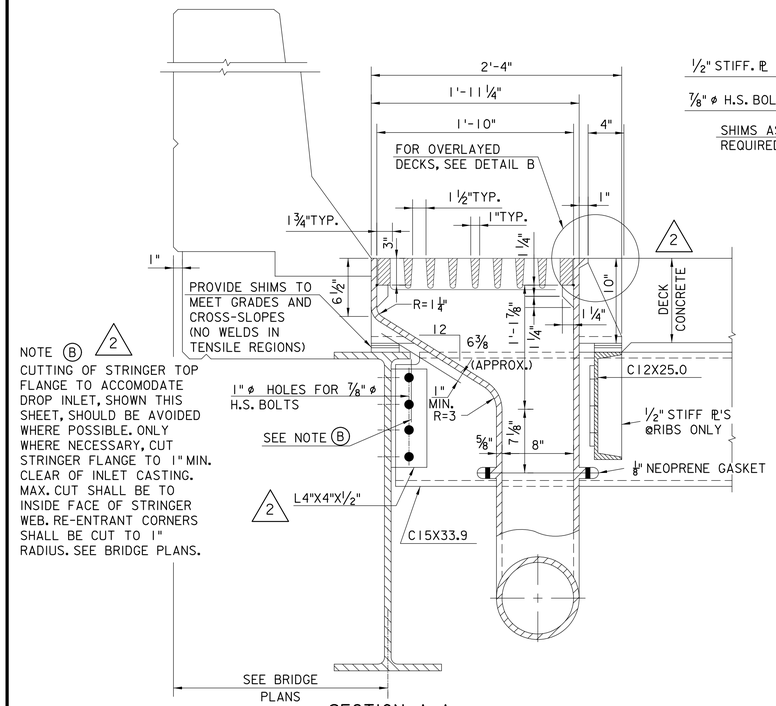

SECTION A-A
1½" = 1'-0"

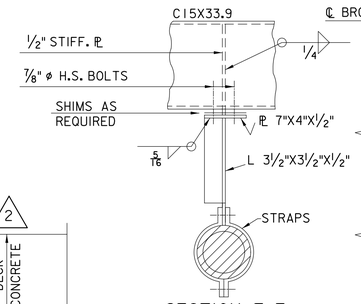

SECTION E-E
1" = 1'-0"

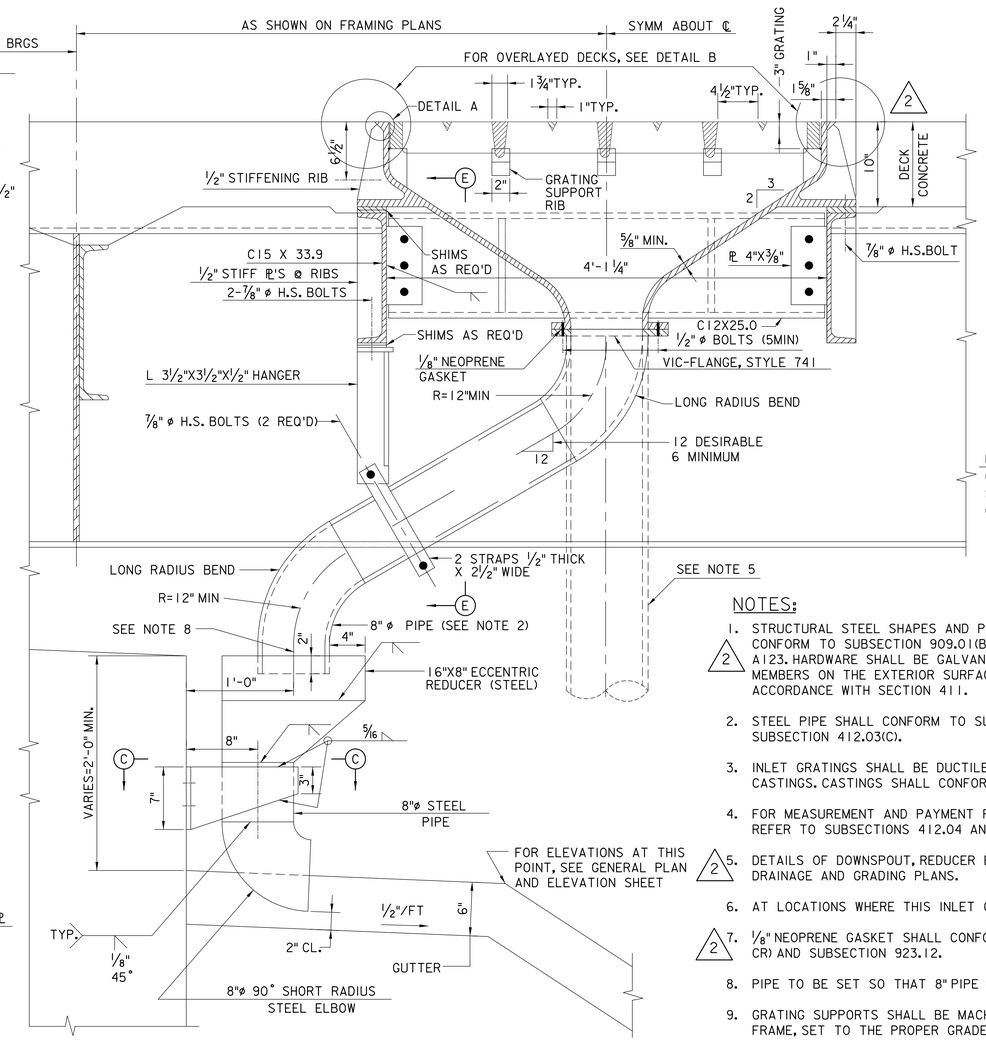

SECTION B-B
TYPICAL DRAINAGE DETAIL AT ABUTMENT WITH SLOPE PAVING
1½" = 1'-0"

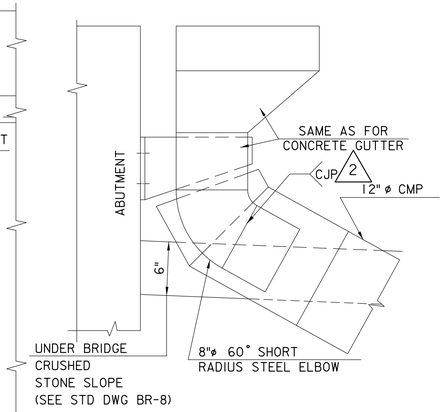

8"ø STEEL DOWNSPOUT CONNECTION TO 12"ø C.M.P.
SECTION @ ℄ OF PIPE - 1½" = 1'-0"

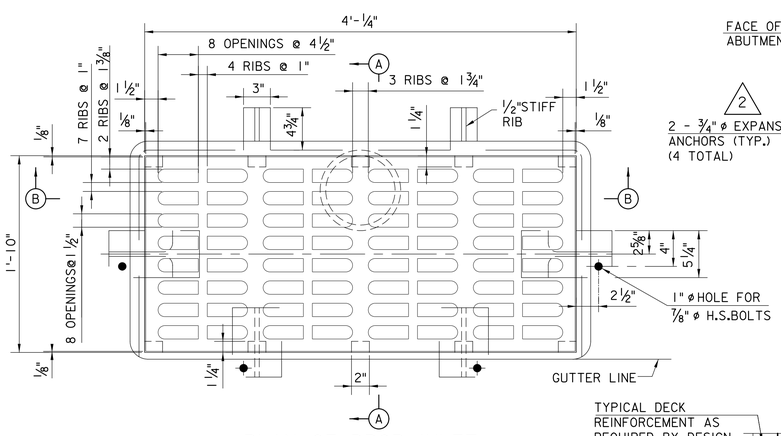

PLAN OF DROP INLET
1½" = 1'-0"

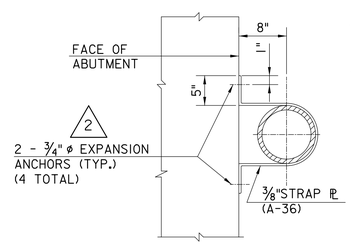

SECTION C-C
1"=1'-0"

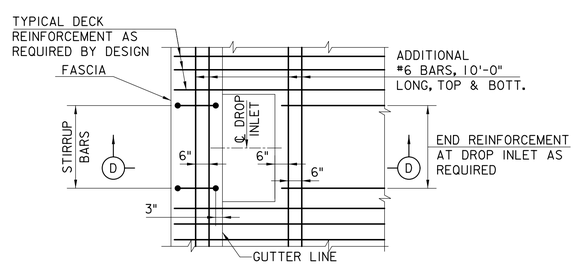

PLAN
ADDITIONAL REINFORCEMENT AT DROP INLETS 2
⅜" = 1'-0"

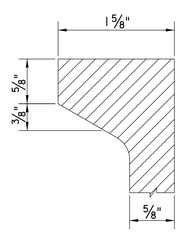

DETAIL A
FULL SCALE

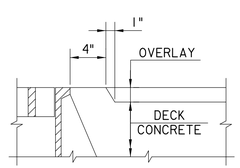

DETAIL B
1½" = 1'-0"

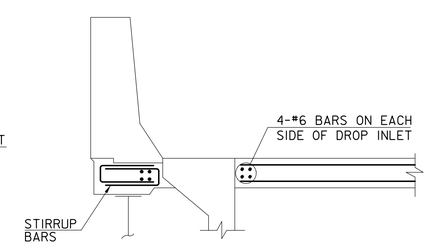

2 SECTION D-D
NTS

NOTES:

1. STRUCTURAL STEEL SHAPES AND PLATES SUPPORTING INLET FRAMES AND SCUPPERS SHALL CONFORM TO SUBSECTION 909.01(B), GRADE 50W, AND GALVANIZED IN ACCORDANCE WITH ASTM A123. HARDWARE SHALL BE GALVANIZED IN ACCORDANCE WITH ASTM A153. STRUCTURAL STEEL MEMBERS ON THE EXTERIOR SURFACES OF FASCIA STRINGERS SHALL BE PAINTED IN ACCORDANCE WITH SECTION 411.
2. STEEL PIPE SHALL CONFORM TO SUBSECTION 909.09. FOR ALTERNATE PIPE MATERIAL, SEE SUBSECTION 412.03(C).
3. INLET GRATINGS SHALL BE DUCTILE IRON CASTINGS. INLET FRAMES SHALL BE GRAY IRON CASTINGS. CASTINGS SHALL CONFORM WITH SUBSECTION 909.04(C).
4. FOR MEASUREMENT AND PAYMENT FOR ALL COMPONENTS OF BRIDGE DRAINAGE STRUCTURES, REFER TO SUBSECTIONS 412.04 AND 412.05.
5. (2) DETAILS OF DOWNSPOUT, REDUCER ETC., SHOWN ON THIS DRAWING APPLY AS REQUIRED BY DRAINAGE AND GRADING PLANS.
6. AT LOCATIONS WHERE THIS INLET CANNOT BE USED, SEE STANDARD DRAWING BR-2B.
7. (2) ⅛" NEOPRENE GASKET SHALL CONFORM TO AASHTO M251/ASTM D4014 (50 DUROMETER, TYPE CR) AND SUBSECTION 923.12.
8. PIPE TO BE SET SO THAT 8" PIPE CENTER LINE MATCHES REDUCER CENTER LINE AT 68°F.
9. GRATING SUPPORTS SHALL BE MACHINED TO PROVIDE UNIFORM BEARING FOR GRATING ON THE FRAME, SET TO THE PROPER GRADE. SEE SUBSECTION 412.03(B).
10. APPLY SEALER CONFORMING TO SUBSECTION 904.06 BETWEEN ALL INLET AND CONCRETE INTERFACES.

0 1/2 1 2 3 4
ORIGINAL SIZE IN INCHES

REV.	DESCRIPTION	DATE
2	REVISED; CONFORMS TO 2019 DESIGN MANUAL AND MINOR REVISIONS	10/22
1	REVISED; GRATE TO CONFORM TO NJDEP CRITERIA	06/07
0	REISSUED; CONFORMS TO 2004 SPECS	02/05

NEW JERSEY TURNPIKE AUTHORITY
NEW JERSEY TURNPIKE
GARDEN STATE PARKWAY
STANDARD DRAWINGS

BRIDGE DRAINAGE DETAILS - I

OFFICE OF THE CHIEF ENGINEER
NEW JERSEY TURNPIKE AUTHORITY
WOODBRIDGE, NEW JERSEY

STANDARD DRAWING
BR-2A

CONTRACT NO. SHEET NO. OF