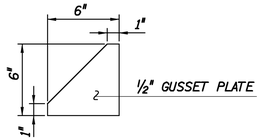

GUSSET PLATE DETAIL

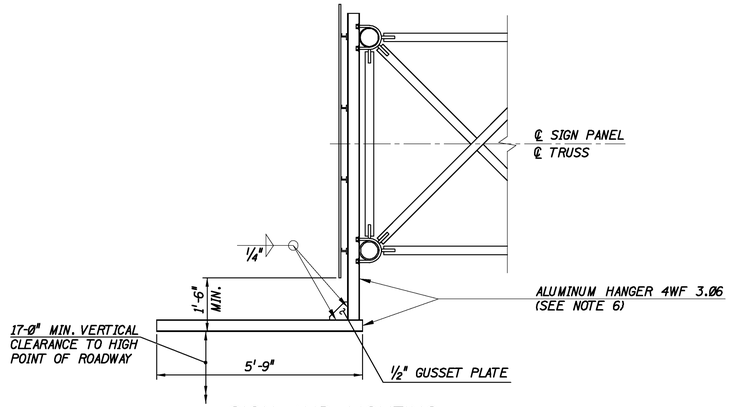

SIGN AND LIGHTING HANGER DETAIL

(SPAN TYPE TRUSS SHOWN, CANT. TRUSS SIMILAR)

½" = 1'-0"

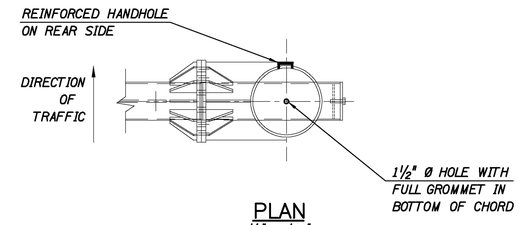

PLAN

½" = 1'-0"

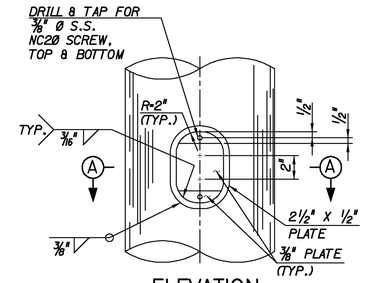

ELEVATION

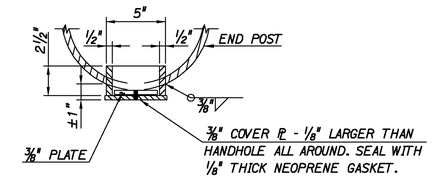

SECTION A–A

REINFORCED HANDHOLE

N.T.S.

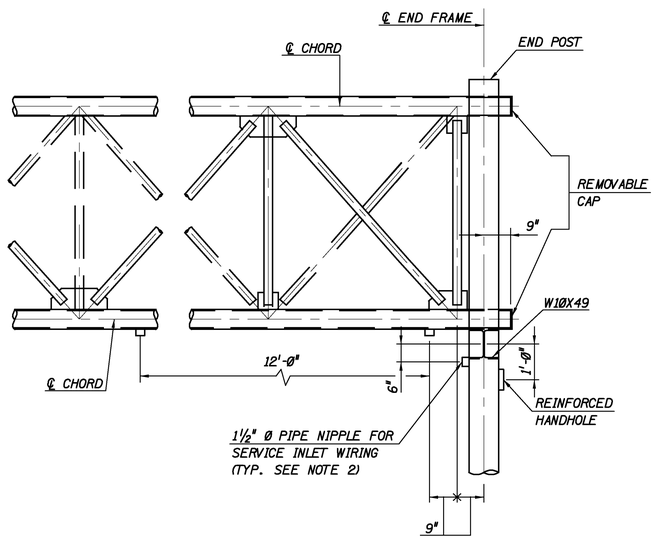

ELEVATION VIEW OF TYPICAL SPAN TYPE TRUSS

N.T.S.

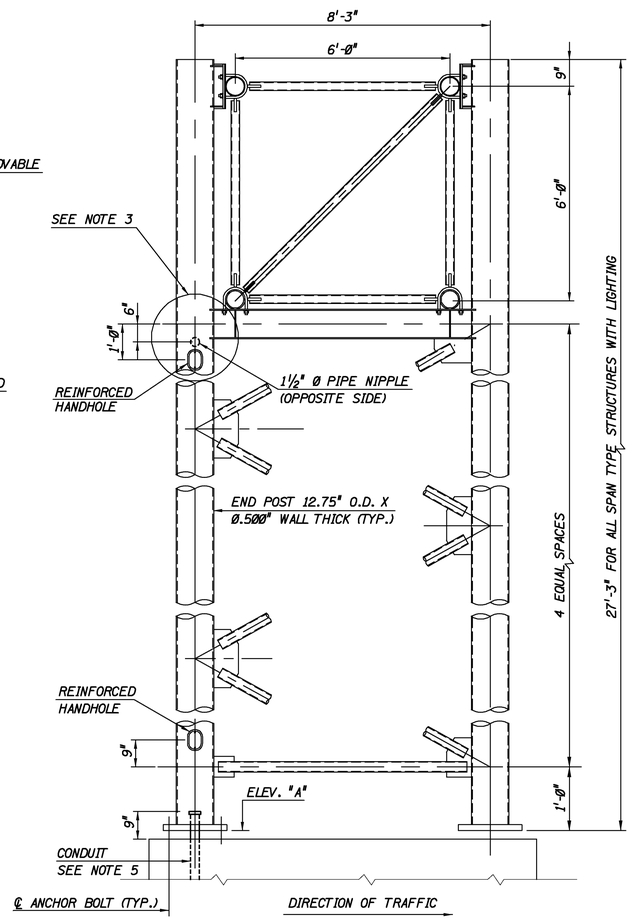

END FRAME ELEVATION

½" = 1'-0"

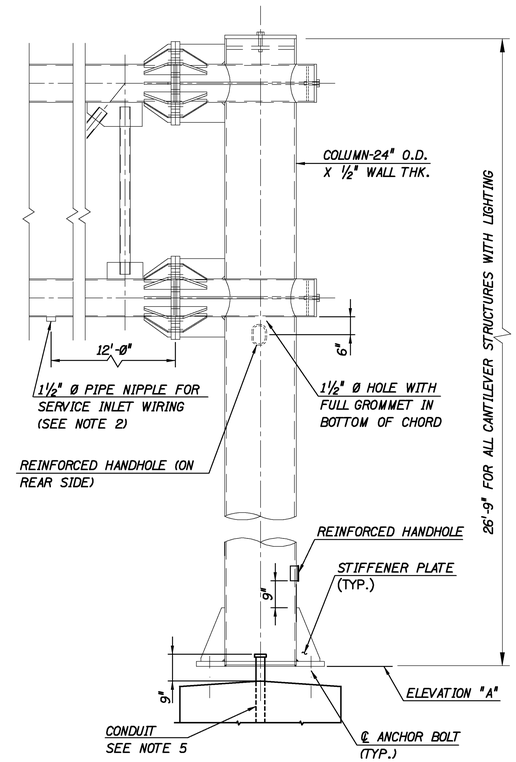

CANTILEVER POST DETAILS

½" = 1'-0"

NOTES:

1. FOR TRUSS END FRAME AND END POST DETAILS NOT SHOWN, SEE STANDARD DRAWINGS SI-16A THROUGH SI-18B.
2. 1½" Ø STANDARD PIPE NIPPLES SHALL BE OF APPROVED MATERIAL AND BE COMPATIBLE WITH THE MATERIAL TO WHICH THEY ARE WELDED.
3. THE REINFORCED HANDHOLE AND 1½" DIAMETER HALF COUPLING FOR WIRING SHALL BE LOCATED AT THE FRONT POST OF THE RIGHT SIDE END FRAME WHEN VIEWED IN THE DIRECTION OF TRAFFIC.
4. BUTTERFLY SIGN STRUCTURES SHALL NOT RECEIVE LIGHTING DETAILS UNLESS NOTED OTHERWISE ON THE CONTRACT PLANS.
5. FOR CONDUIT SIZE, TYPE, QUANTITY AND PAYMENT, SEE STANDARD DRAWING E-22.
6. SIGN AND LIGHTING HANGERS SHALL BE SPACED AT 4'-6" MAX. O.C. SMALLER SPACING AT LIGHTING EQUIPMENT MOUNTING LOCATIONS MAY BE REQUIRED AS PER LIGHTING EQUIPMENT MANUFACTURER.
7. FOR ADDITIONAL LIGHTING AND WIRING DETAILS, SEE STANDARD DRAWINGS E-21 AND E-22.

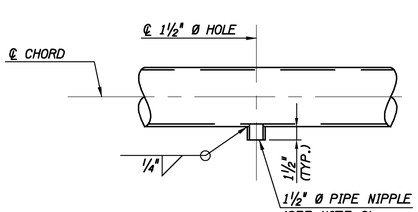

DETAIL OF PIPE NIPPLE ON CHORD

(DETAIL OF PIPE NIPPLE ON END POST SIMILAR)

1½" = 1'-0"

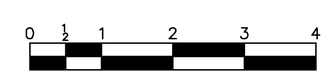

ORIGINAL SIZE IN INCHES

WHEN A SIGN SUPPORT STRUCTURE REQUIRES LIGHTING, THIS STANDARD DRAWING SHALL BE REFERENCED ON THE GP&E.

APP.	NO.	DATE	REVISION
		12/09	ORIGINAL DRAWING

NEW JERSEY TURNPIKE AUTHORITY
NEW JERSEY TURNPIKE

SIGN SUPPORT STRUCTURE ELECTRICAL DETAILS

OFFICE OF THE CHIEF ENGINEER
WOODBRIDGE, NEW JERSEY

2009 STANDARD DRAWING SI–19

CONTRACT NO. SHEET NO. OF