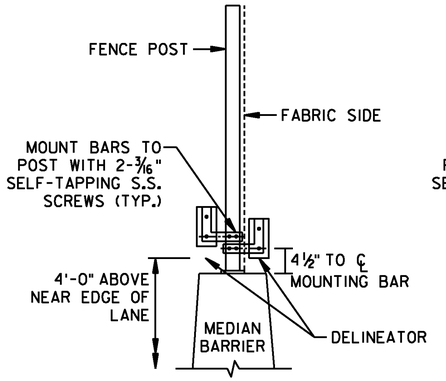

MEDIAN

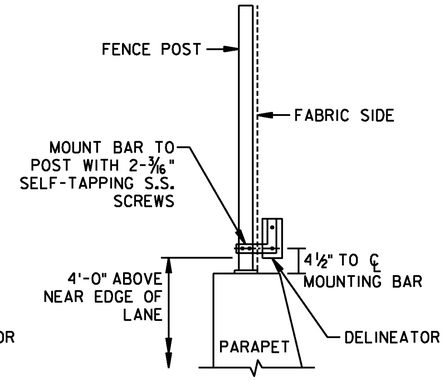

PARAPET

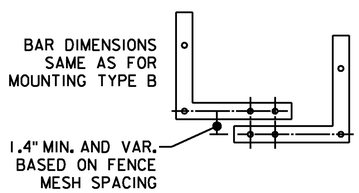

MOUNTING TYPE A

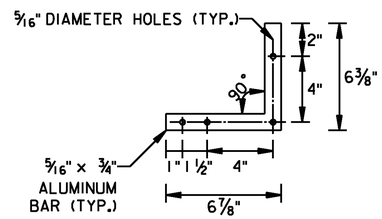

MOUNTING TYPE B

FENCE MOUNTED (F)

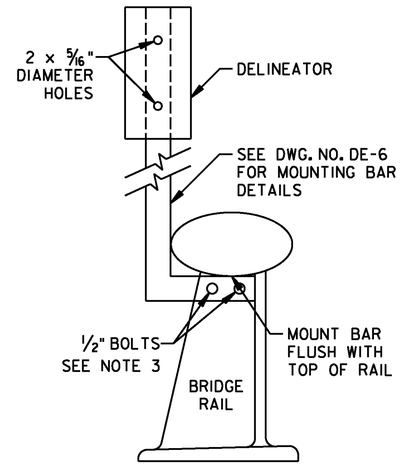

MOUNTING TYPE A
BRIDGE RAIL MOUNTED (B)

(MOUNTING BRACKET TO BE ALUMINUM OR STEEL TO MATCH BRIDGE RAIL MATERIAL)

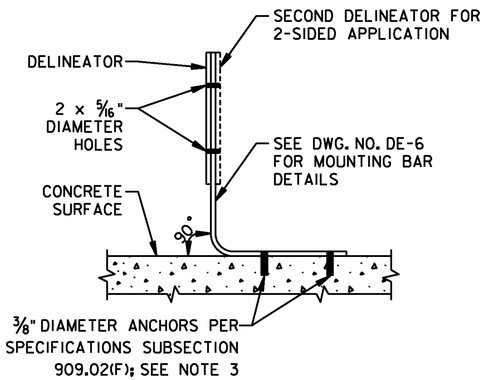

MOUNTING TYPE A
CONCRETE MOUNTED (C)

(BARRIER OR PARAPET)

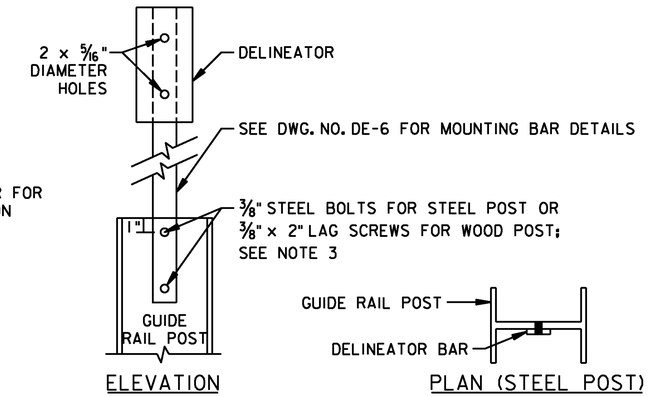

MOUNTING TYPE A
GUIDE RAIL MOUNTED (G)

NOTES

1. SEE STANDARD DRAWING DE-2 FOR DELINEATOR ASSEMBLY CLASSIFICATION.
2. DELINEATORS ARE TO BE SECURED TO THE SUPPORTING BAR USING 10/24 x 2 UNSLOTTED SCREWS AND ALUMINUM TAPERED SERRATED SECURITY NUTS.
3. HOLE DIAMETER AND DEPTH AS REQUIRED BY MANUFACTURER TO PROVIDE SECURE CONNECTION TO MOUNTING BAR.
4. STEEL MOUNTING PIECES AND HARDWARE SHALL BE GALVANIZED AFTER FABRICATION PER SUBSECTION 909.11 OF THE STANDARD SPECIFICATIONS.
5. DELINEATORS SHALL MEET SECTION 515 OF THE STANDARD SPECIFICATIONS. FOR TYPICAL DELINEATOR APPLICATIONS, SEE DRAWING NOS. DE-4 AND DE-5.
6. WHERE ALIGNMENT OF DELINEATORS ON BRIDGES DOES NOT COINCIDE WITH ALIGNMENT ON APPROACHES, SMOOTH REVERSE CURVES SHALL BE USED FOR THE TRANSITION AREA AS APPROVED BY THE ENGINEER.

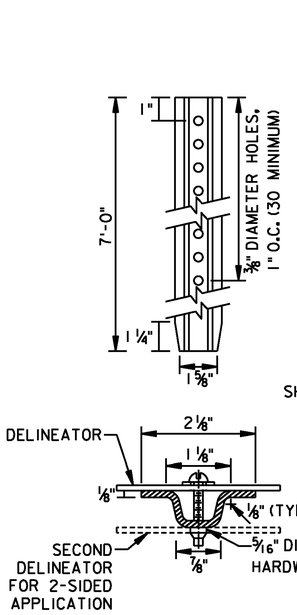

FLANGED CHANNEL POST

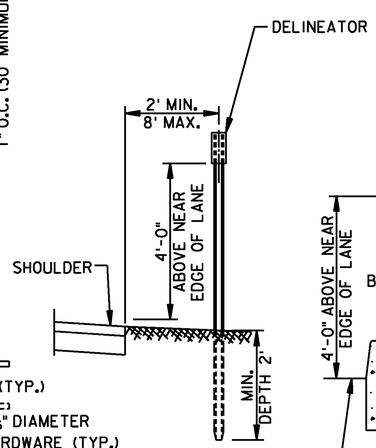

MOUNTING TYPE A

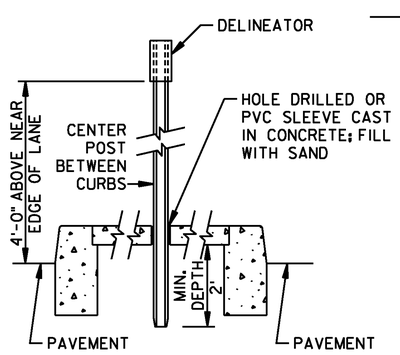

MOUNTING TYPE B

(TWO-WAY RAMP MEDIANS)

POST MOUNTED (P)

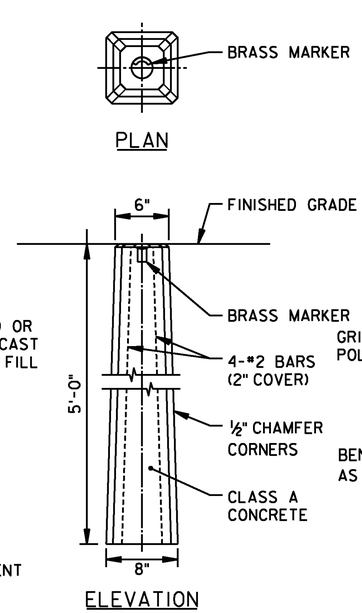

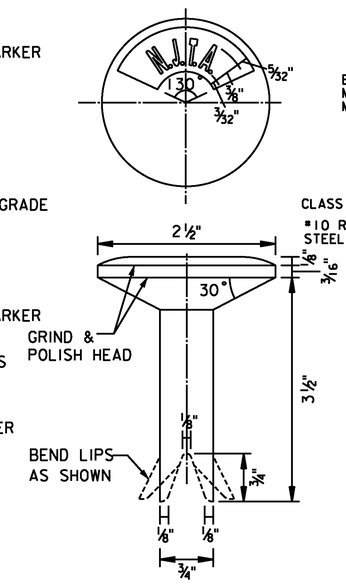

BRASS MARKER

CONCRETE MONUMENT

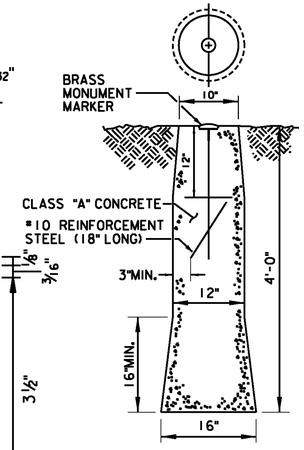

OPTIONAL:
POURED-IN-PLACE MONUMENT

0 ½ 1 2 3 4
ORIGINAL SIZE IN INCHES

App.	No.	DATE	REVISION
RAM	2	01/14	MODIFIED MONUMENT DETAIL
	1	11/12	REISSUED DRAWING
		04/09	ORIGINAL DRAWING

NEW JERSEY TURNPIKE AUTHORITY

MONUMENT AND DELINEATOR DETAILS

OFFICE OF THE CHIEF ENGINEER

2009 STANDARD DRAWING DE-1

CONTRACT NO.

SHEET NO. OF