NOTES:

1. HIGH LOAD MULTI-ROTATIONAL BEARING ASSEMBLIES AND ANCHOR BOLTS SHALL BE DESIGNED IN CONFORMANCE WITH THE CURRENT EDITION OF THE AASHTO LRFD BRIDGE DESIGN SPECIFICATIONS, WITH INTERIMS. BEARING DESIGN, FABRICATION, DELIVERY, STORAGE, AND HANDLING SHALL BE IN ACCORDANCE WITH THE SUPPLEMENTAL SPECIFICATIONS.

2. CROSS HATCHED COMPONENTS OF THE BEARINGS ARE SHOWN FOR REPRESENTATIVE PURPOSES ONLY. THE ACTUAL DETAILS AND CONFIGURATION OF THE COMPONENTS WILL BE DEPENDENT UPON THE SPECIFIC BEARING AS FURNISHED BY THE SELECTED BEARING MANUFACTURER. THE BEARINGS PROVIDED SHALL HAVE A CAPACITY SUFFICIENT TO RESIST ALL LOAD COMBINATION FORCES, ROTATIONS AND MOVEMENTS AS PROVIDED IN THE HLMR BEARING DESIGN TABLE ON THIS SHEET.

3. STRUCTURAL STEEL FOR SOLE PLATES, MASONRY PLATES AND HLMR BEARING ASSEMBLIES (EXCEPT FOR GUIDE BARS AND SHEAR RESTRICTION MECHANISMS) SHALL BE ASTM A709, GRADE 36, 50, OR 50W. GUIDE BARS AND SHEAR RESTRICTION MECHANISMS SHALL BE AS PER MANUFACTURER'S SPECIFICATIONS AND AS APPROVED BY THE ENGINEER. ALL STEEL WORK SHALL BE COATED IN ACCORDANCE WITH THE SUPPLEMENTAL SPECIFICATIONS.

4. FULLY THREADED ANCHORS AND HEX HEADED ANCHOR BOLTS SHALL CONFORM TO ASTM F1554, GRADE 105. SWEDGED ANCHOR BOLTS WITH THREADED ENDS MAY BE SUBSTITUTED AT THE APPROVAL OF THE ENGINEER. THREADED COUPLER NUTS SHALL CONFORM TO ASTM A563 GRADE A OR SHALL BE FABRICATED FROM APPROVED MATERIAL. WASHERS SHALL CONFORM TO ASTM F436. ANCHOR BOLTS, COUPLER NUTS, NUTS AND WASHERS SHALL BE HOT DIP GALVANIZED IN ACCORDANCE WITH ASTM A153. ANY DAMAGE TO THE GALVANIZED SURFACES SHALL BE REPAIRED IN ACCORDANCE WITH ASTM A780.

5. WELDING SHALL BE IN ACCORDANCE WITH CURRENT ANSI/AASHTO/AWS BRIDGE WELDING CODE D1.5, WITH LATEST AASHTO REVISIONS.

6. THE CONTINUOUS WELD CONNECTING THE BOTTOM FLANGE TO THE SOLE PLATE SHALL BE ALLOWED TO COOL AFTER EACH PASS. THE TEMPERATURE OF THE STEEL ADJACENT TO THE PTFE SHEET OR ELASTOMER SHALL NOT EXCEED 200°F. TEMPERATURE SHALL BE CONTROLLED BY THE WELDING PROCEDURES AND TEMPERATURE INDICATING CRAYONS OR OTHER DEVICES APPROVED BY THE ENGINEER. QUENCHING TO ACCELERATE COOLING IS NOT PERMITTED.

7. THE SIZE OF THE WELDS BETWEEN THE BOTTOM FLANGE AND SOLE PLATE SHALL BE AS SHOWN ON THE CONTRACT PLANS. MINIMUM WELD SIZE SHALL BE 5/16". THE TRANSVERSE JOINTS BETWEEN THE BOTTOM FLANGE AND THE SOLE PLATE SHALL BE FILLED WITH A NON-HARDENING CAULK COMPOUND IN ACCORDANCE WITH SECTION 923.05 OF THE STANDARD SPECIFICATIONS.

8. THE CONTRACTOR SHALL PROTECT THE BEARINGS FROM DAMAGE DUE TO ROTATION OF BEARING CAUSED BY THE APPLICATION OF THE GIRDER SELF-WEIGHT AND DECK DEAD LOAD. THE METHOD OF PROTECTION SHALL BE DEFINED IN THE BEARING INSTALLATION SCHEME TO BE SUBMITTED AS A WORKING DRAWING IN ACCORDANCE WITH SECTION 104.08 OF THE STANDARD SPECIFICATIONS.

9. THE FILLET WELD BETWEEN THE BOTTOM FLANGE AND THE SOLE PLATE SHALL BE MADE AFTER THE DECK HAS BEEN POURED AND THE BEARING ASSEMBLIES HAVE BEEN SET INTO FINAL POSITION.

10. MT INDICATES MAGNETIC PARTICLE TESTING. 10% MT INDICATES THAT AT LEAST 1 FOOT OF EVERY 10 FOOT LENGTH, 1 FOOT OF WELDS LESS THAN 10 FEET, AND 2 INCHES OF WELDS LESS THAN 1 FOOT, SHALL BE MAGNETIC PARTICLE TESTED.

11. ANCHOR BOLTS MAY BE SET IN FORMS PRIOR TO POURING OF THE SUBSTRUCTURE CONCRETE OR SET IN OVERSIZED (3" DIAMETER MAX.) CORRUGATED METAL SLEEVES PREVIOUSLY PLACED. ANCHOR ROD HOLES MAY BE CORE DRILLED OR STAR DRILLED ONLY AS APPROVED BY THE ENGINEER. WASH AND DRY HOLE BEFORE FILLING WITH RESIN OR EPOXY GROUT IN ACCORDANCE WITH SUBSECTION 403.09(B) OF THE STANDARD SPECIFICATIONS. DRILLED HOLE DIAMETER SHALL BE AS PER EPOXY GROUT OR RESIN MANUFACTURER RECOMMENDATIONS.

12. PERMITTED MOVEMENT IS THE DESIGN ONE WAY MOVEMENT FROM CENTERLINE OF BEARING PLUS AN ADDITIONAL 1 INCH OF TOLERANCE.

13. GUIDED EXPANSION BEARINGS MAY BE GUIDED EITHER BY CENTER PIN OR EDGE GUIDE BAR MECHANISM. METHOD OF GUIDANCE SHALL BE CLEARLY DEPICTED ON THE CONTRACTOR'S WORKING DRAWINGS.

14. SOLE PLATE SHALL BE BEVELED AS NECESSARY TO ACCOMMODATE THE VERTICAL GEOMETRY OF THE SUPERSTRUCTURE. THE SOLE PLATE SHALL BE BEVELED IF THE LONGITUDINAL GRADE OF THE BOTTOM FLANGE IS 1% OR MORE, OR IF THE REQUIRED BEVEL IS 1/8" OR MORE. UNDER FULL DEAD LOAD, THE BOTTOM OF THE SOLE PLATE SHALL BE TRUE LEVEL. A MINIMUM THICKNESS OF 1 1/2" AT THE CENTERLINE OF THE PLATE SHALL BE MAINTAINED.

15. SOLE PLATES AND MASONRY PLATES SHALL BE DESIGNED AND FURNISHED BY THE BEARING MANUFACTURER. MASONRY PLATES SHALL BE DESIGNED TO BEAR ON THE SUBSTRUCTURE BASED ON THE CONCRETE DESIGN STRENGTH AS SPECIFIED IN THE PLANS.

16. DIMENSION "H" REPRESENTS THE ASSUMED HEIGHT OF THE BEARING ASSEMBLY BETWEEN THE SOLE PLATE AND MASONRY PLATE. THE CONTRACTOR SHALL ADJUST THE BEARING SEAT ELEVATIONS BASED ON THE EXACT HEIGHTS OF THE BEARING ASSEMBLIES AND THE SOLE PLATE AND MASONRY PLATE THICKNESSES AS PROVIDED BY THE BEARING MANUFACTURER.

17. BEARING SEATS SHALL NOT BE POURED UNTIL THE BEARINGS ARE SELECTED, THE BEARING WORKING DRAWINGS ARE APPROVED, AND THE SEAT ELEVATIONS HAVE BEEN APPROVED BY THE ENGINEER.

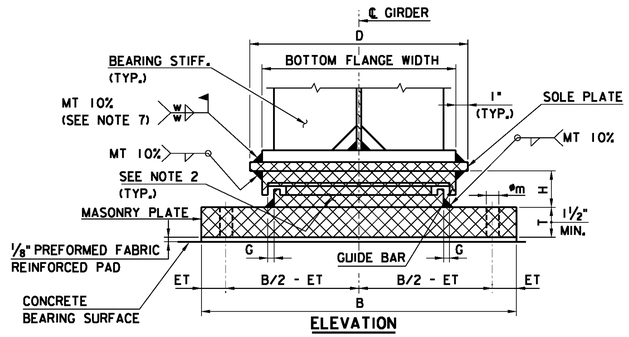

ELEVATION

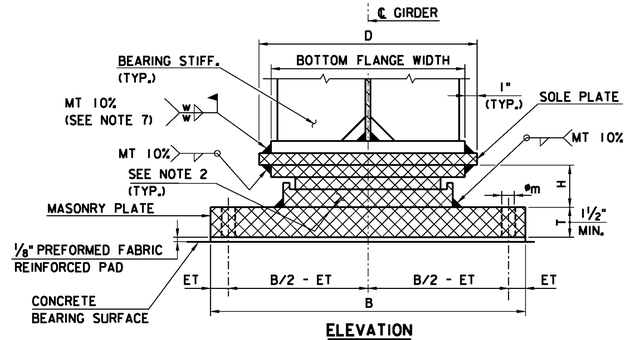

ELEVATION

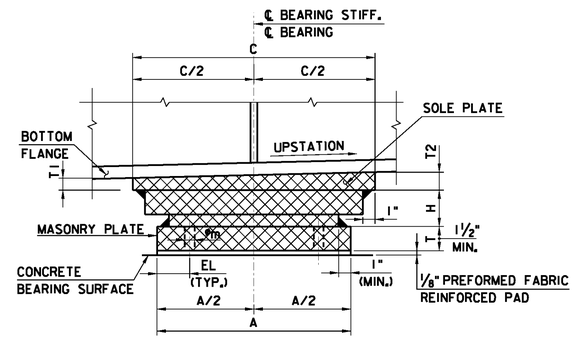

SIDE ELEVATION

GUIDED EXPANSION BEARING

(GUIDED EXPANSION BEARING SHOWN, UNGUIDED EXPANSION BEARING SIMILAR.)

N.T.S.

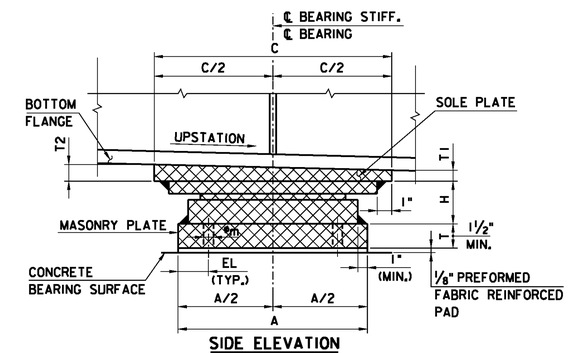

SIDE ELEVATION

FIXED BEARING

N.T.S.

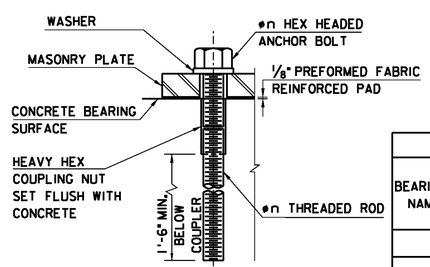

ANCHOR BOLT DETAIL

N.T.S.

HLMR BEARING DESIGN TABLE

LOAD COMBINATION LIMIT STATE	LOAD TYPE (KIPS)	BEARING DESIGNATION			
STRENGTH I	MAX. VERT.				
	MIN. VERT.				
	HORIZ. LONG.				
	HORIZ. TRANS.				
STRENGTH II	MAX. VERT.				
	MIN. VERT.				
	HORIZ. LONG.				
	HORIZ. TRANS.				
STRENGTH III	MAX. VERT.				
	MIN. VERT.				
	HORIZ. LONG.				
	HORIZ. TRANS.				
STRENGTH V	MAX. VERT.				
	MIN. VERT.				
	HORIZ. LONG.				
	HORIZ. TRANS.				
SERVICE I	MAX. VERT.				
	MIN. VERT.				
	HORIZ. LONG.				
	HORIZ. TRANS.				
EXTREME EVENT I	MAX. VERT.				
	MIN. VERT.				
	HORIZ. LONG.				
	HORIZ. TRANS.				
REQUIRED HORIZONTAL MOVEMENT (1)					
CONTRACTION MOVEMENT (IN)					
EXPANSION MOVEMENT (IN)					
DESIGN ONE WAY MOVEMENT (2)					
MAXIMUM LIVE LOAD ROTATION (3)					
AT SERVICE LIMIT STATE (RAD)					
QUANTITY OF BEARING TYPE					
BEARING TYPE LOCATION					

(1) REQUIRED HORIZONTAL MOVEMENTS PROVIDED ASSUME A SETTING TEMPERATURE OF 70 DEG. F.

(2) GREATER OF CONTRACTION OR EXPANSION.

(3) LIVE LOAD ROTATION DOES NOT INCLUDE FABRICATION AND INSTALLATION TOLERANCE OR ALLOWANCE FOR UNCERTAINTIES. BEARING DESIGNER SHALL INCLUDE THESE AS PER AASHTO LRFD, ARTICLE 14.4.2.2.

AS-BUILT BEARING TABLE (TO BE COMPLETED BY BEARING MANUFACTURER)

BEARING MANUFACTURER NAME AND ITEM NO.	LOCATION	BEARING DESIGNATION	QUANTITY REQUIRED	CAPACITY (KIPS)	PERMITTED MOVEMENT (IN) (SEE NOTE 12)	(G) GUIDE CLEARANCE (IN)	MASONRY PLATE						BRG.	ANCHOR BOLTS		SOLE PLATE				BEARING SKEW (SEE DIAGRAM)
							A (IN)	B (IN)	T (IN)	ET (IN)	EL (IN)	ϕm (IN)	H (IN)	ϕn (IN)	BOLTS PER BRG.	C (IN)	D (IN)	BEVEL T1 (IN)	BEVEL T2 (IN)	

18. DESIGN AND FINAL LOCATION OF ANCHOR BOLTS TO BE DETERMINED BY THE CONTRACTOR BASED ON APPROVED BEARING ASSEMBLY AND MASONRY PLATE SHOP DRAWINGS. THE MINIMUM NUMBER OF ANCHOR BOLTS PER BEARING ASSEMBLY SHALL BE TWO. LOCATIONS SHALL BE SET TO AVOID CONFLICTS AND INTERFERENCES WITH SUBSTRUCTURE REINFORCEMENT, BEARING COMPONENTS, AND STRUCTURAL STEEL DURING INSTALLATION AND TIGHTENING OF THE ANCHOR BOLTS. METHOD OF ANCHOR BOLT INSTALLATION SHALL BE CLEARLY DEPICTED ON THE CONTRACTOR'S WORKING DRAWINGS.

19. FINAL LOCATION AND INSTALLATION OF ANCHOR BOLTS AS DETERMINED BY THE CONTRACTOR SHALL ALLOW FOR THE FUTURE REMOVAL OF THE HEX HEADED ANCHOR BOLT FOR REPLACEMENT OF THE BEARING ASSEMBLY.

20. MASONRY PLATES SHALL BE SET SUCH THAT THEY WILL BE LOCATED AT THE SUBSTRUCTURE UNIT CENTERLINE OF BEARING AT THE CENTERLINE OF GIRDER WEB. SOLE PLATES SHALL BE SET SUCH THAT THEY WILL BE LOCATED AT THE CENTERLINE OF THE GIRDER WEB AT THE CENTERLINE OF THE BEARING STIFFENER OR STIFFENER ARRANGEMENT.

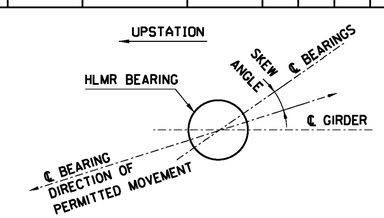

BEARING SKEW DIAGRAM

N.T.S.

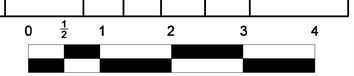

ORIGINAL SIZE IN INCHES

App.	No.	DATE	REVISION
	0	3/12	ISSUED DRAWING

NEW JERSEY TURNPIKE AUTHORITY

HLMR BEARING DETAILS

OFFICE OF THE CHIEF ENGINEER
WOODBRIDGE, NEW JERSEY

2011 STANDARD DRAWING BR-12

CONTRACT NO. SHEET NO. OF